## CILINDRO TUFFANTE TIPO "HFRT"
## *PLUNGER CYLINDER "HFRT" TYPE*

HFRT

Series M250

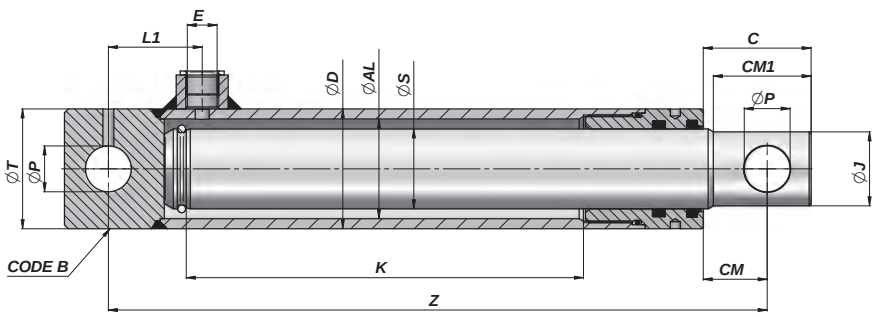


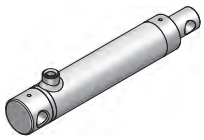

| Codice *Code* | K | Z | kg | E BSP | L1 | ØP | CM | C | ØJ | CM1 | ØT | Code B |
|---|---|---|---|---|---|---|---|---|---|---|---|---|
| **ØD 40 ØAL 30 ØS 25** | | | | | | | | | | | | |
| HFRT125100 | 100 | 190 | 1,64 | 3/8" | 40 | 14,10 | 24 | 38 | 22 | 35 | 40 | CFHR030014030 |
| HFRT125150 | 150 | 240 | 2,05 | | | | | | | | | |
| HFRT125200 | 200 | 290 | 2,46 | | | | | | | | | |
| HFRT125250 | 250 | 340 | 2,87 | | | | | | | | | |
| HFRT125300 | 300 | 390 | 3,28 | | | | | | | | | |
| **ØD 50 ØAL 40 ØS 30** | | | | | | | | | | | | |
| HFRT230200 | 200 | 300 | 3,64 | 3/8" | 42 | 16,20 | 26 | 42 | 27 | 37 | 50 | CF04005016 |
| HFRT230250 | 250 | 350 | 4,19 | | | | | | | | | |
| HFRT230300 | 300 | 400 | 4,74 | | | | | | | | | |
| HFRT230350 | 350 | 450 | 5,30 | | | | | | | | | |
| HFRT230400 | 400 | 500 | 5,85 | | | | | | | | | |
| HFRT230550 | 550 | 650 | 7,52 | | | | | | | | | |
| HFRT230700 NEW! | 700 | 800 | 9,18 | | | | | | | | | |
| **ØD 60 ØAL 50 ØS 40** | | | | | | | | | | | | |
| HFRT340200 | 200 | 330 | 6,08 | 3/8" | 47 | 23,10 | 32 | 54 | 37 | 49 | 60 | CFHR050023050 |
| HFRT340250 | 250 | 380 | 6,91 | | | | | | | | | |
| HFRT340300 | 300 | 430 | 7,75 | | | | | | | | | |
| HFRT340350 | 350 | 480 | 8,58 | | | | | | | | | |
| HFRT340400 | 400 | 530 | 9,41 | | | | | | | | | |
| HFRT340550 | 550 | 680 | 11,90 | | | | | | | | | |
| HFRT340700 | 700 | 830 | 14,40 | | | | | | | | | |
| **ØD 60 ØAL 50 ØS 45** | | | | | | | | | | | | |
| HFRT345200 NEW! | 200 | 330 | 6,73 | 3/8" | 47 | 23,10 | 34 | 56 | 42 | 49 | 60 | CFHR05023050 |
| HFRT345250 NEW! | 250 | 380 | 7,69 | | | | | | | | | |
| HFRT345300 NEW! | 300 | 430 | 8,66 | | | | | | | | | |
| HFRT345350 NEW! | 350 | 480 | 9,62 | | | | | | | | | |
| HFRT345400 NEW! | 400 | 530 | 10,58 | | | | | | | | | |
| **ØD 70 ØAL 60 ØS 50** | | | | | | | | | | | | |
| HFRT450300 | 300 | 460 | 11,40 | 3/8" | 50 | 25,50 | 49 | 74 | 47 | 65 | 65 | CFHRT07060 |
| HFRT450400 | 400 | 560 | 13,74 | | | | | | | | | |
| HFRT450550 | 550 | 710 | 17,25 | | | | | | | | | |
| HFRT450700 | 700 | 860 | 20,77 | | | | | | | | | |
| **ØD 80 ØAL 70 ØS 60** | | | | | | | | | | | | |
| HFRT560200 NEW! | 200 | 360 | 12,26 | 3/8" | 50 | 25,25 | 36 | 61 | 57 | 57 | 75 | CFHRT08070 |
| HFRT560300 NEW! | 300 | 460 | 15,40 | | | | | | | | | |
| HFRT560400 NEW! | 400 | 560 | 18,53 | | | | | | | | | |
| HFRT560550 NEW! | 550 | 710 | 23,24 | | | | | | | | | |
| HFRT560700 NEW! | 700 | 860 | 27,95 | | | | | | | | | |
| **ØD 92 ØAL 80 ØS 70** | | | | | | | | | | | | |
| HFRT570300 NEW! | 300 | 509 | 22,66 | 3/8" | 55 | 30,25 | 66 | 96 | 67 | 90 | 85 | CFHRT09080 |
| HFRT570400 NEW! | 400 | 609 | 26,94 | | | | | | | | | |
| HFRT570500 NEW! | 500 | 709 | 31,23 | | | | | | | | | |

MATERIALE TUBO: ACCIAIO St 52.3 DIN 2393 ISO H9 MATERIALE ASTA: ACCIAIO UNI C45 SAE 1045 CROMO 25 MICRON ±5 Rating 9 / 120 h ISO 10289 – 1999/ISO 9227-NSS
*TUBE MATERIAL : STEEL St 52.3 DIN 2393 ISO H9 ROD MATERIAL : STEEL UNI C45 SAE 1045 CHROME 25 MICRON ±5 Rating 9 / 120 h ISO 10289 – 1999/ISO 9227-NSS*

CARATTERISTICHE TECNICHE : VEDI PAGINA 40 - *TECHNICAL SPECIFICATIONS : SEE PAGE 40*