5F Series 5

NEW

SPECIFICATION SHEET

FRONT END CYLINDER | TRUNNION - EYE

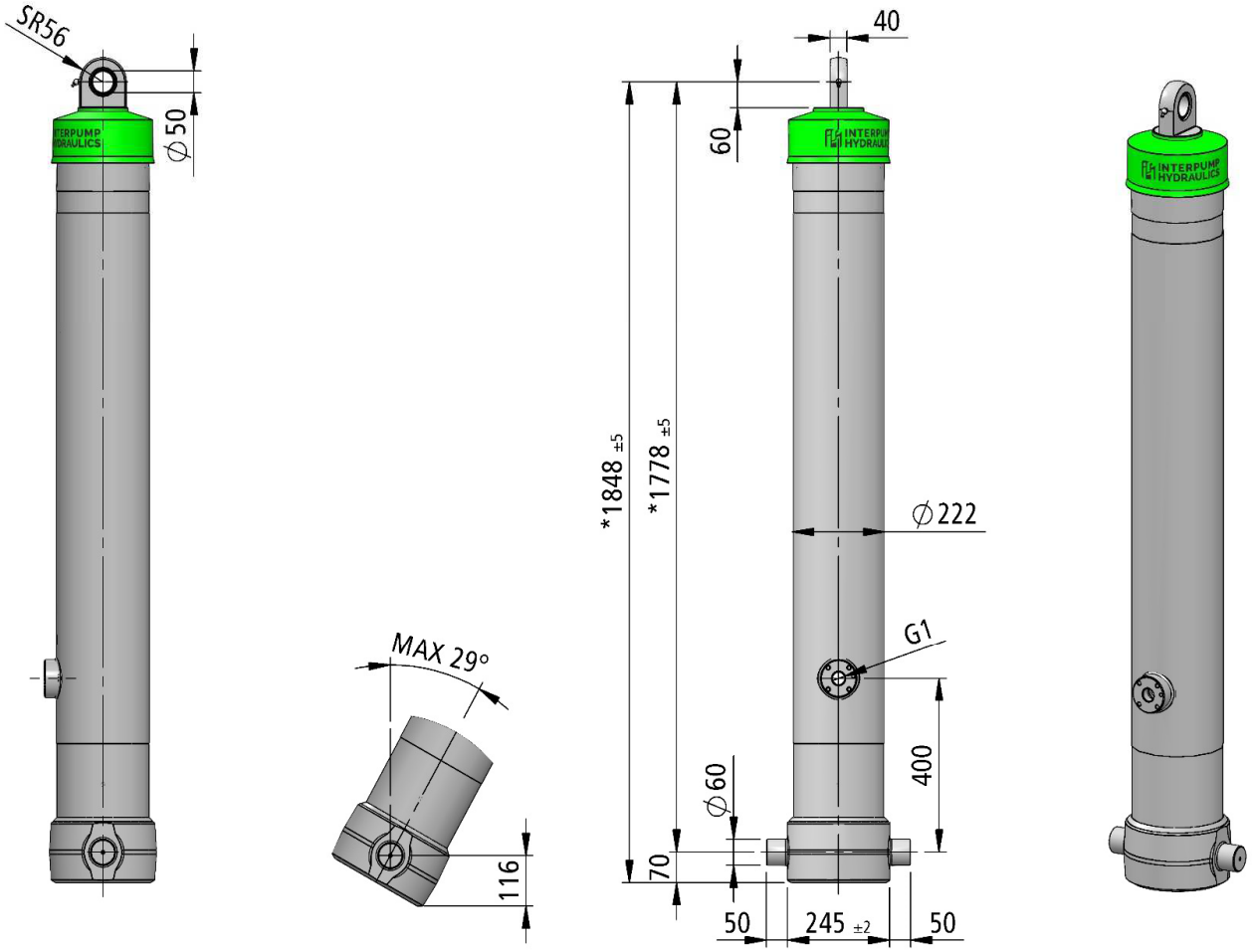

5F1685196501AN - 5F-07020-196-5-M1778-0000N											Tipping weight 56-98 ton (**)	
Extension	1	2	3	4	5	6	7	8	9	10	**Maximum pressure 220 bar**	
Rod diameter [mm]	196	174	154	135	116						No. 5 telescopic extensions	
Stroke length [mm]	1397	1403	1404	1408	1408						Total stroke length: 7020 mm	
Oil [dm³]	42.2	33.3	26.1	20.2	14.9						Working volume 136,7 dm³	Residual volume 9,9 dm³
Thrust [kN] at p max	664	523	410	315	233						Max cylinder load - Start tipping 345 kN	
											Critical buckling load fully extended 289 kN (273 bar)	

Technical notes		Guide kit: K15F001965001 - Seal kit: K25F001965001
* Mounting dimensions 1778 including 20 (-5;+30) mm pull out	Max pump flow 220 L/min with end of stroke	Weight 352 kg
Seal ring: Temperature range (-40; +100) °C - Maximum linear speed 0.5 m/s	Max pump flow 190 L/min without end of stroke	Tipping time at flow max 37 s

Enamel RAL9005 two-component solvent semi-gloss finish minimum thickness 60 m 180 h spray salt test ISO 9227 rating 9 ISO 10289

Chrome coating type CRN on rod stage 40 h spray salt test ISO 9227 rating 9 ISO 10289

All the information here reported are intended for further investigations by users with technical knowledge. The user, as manufacturer of the completed machinery which will incorporate the here described components, is the solely responsible for the final selection of the components. The user must carry out necessary research and tests on components to determine whether, by its design and construction, all performance, endurance, maintenance, safety and warning requirements are met. The user must assure the compliance of the completed machinery with all appropriate laws, directives, norms, industry standards The cylinder has been designed to provide only a linear pushing force. The cylinder is not a structural member and must not be used as a stabilizer or be subject to side or pulling load. The cylinder will not prevent the dump body or trailer from rollover or lateral tilt. Cylinder rated pressure reflect only the capability of the pressure-containing envelope and not the force transmitting capability of mounting configurations. The ordinary use of telescopic cylinder will not require any coating since the telescopic stages are exposed to atmospheric agents only during the tip-up operation, if duration is below 2 hours. (**) Tipping weight calculation-The body weight plus the max payload are the max tipping weight that can be raised by the cylinder. This value, calculated at the max pressure, is a rough indication of the tipping power of the cylinder and must be used as a first criteria for the selection of the cylinder. The real tipping mass can only be calculated by the design engineer of the completed machinery, and must take into account the geometry of the dump body, the operating conditions and all the reasonably foreseeable uses.

Related documentation 12/01/2023

Read and understand Mounting instructions, User manual, Oil specifications, User responsibility before use

rev. 1 - 2023.01.12 - MP