5C Series 5

NEW

SPECIFICATION SHEET

FRONT END CYLINDER | OUTER COVER

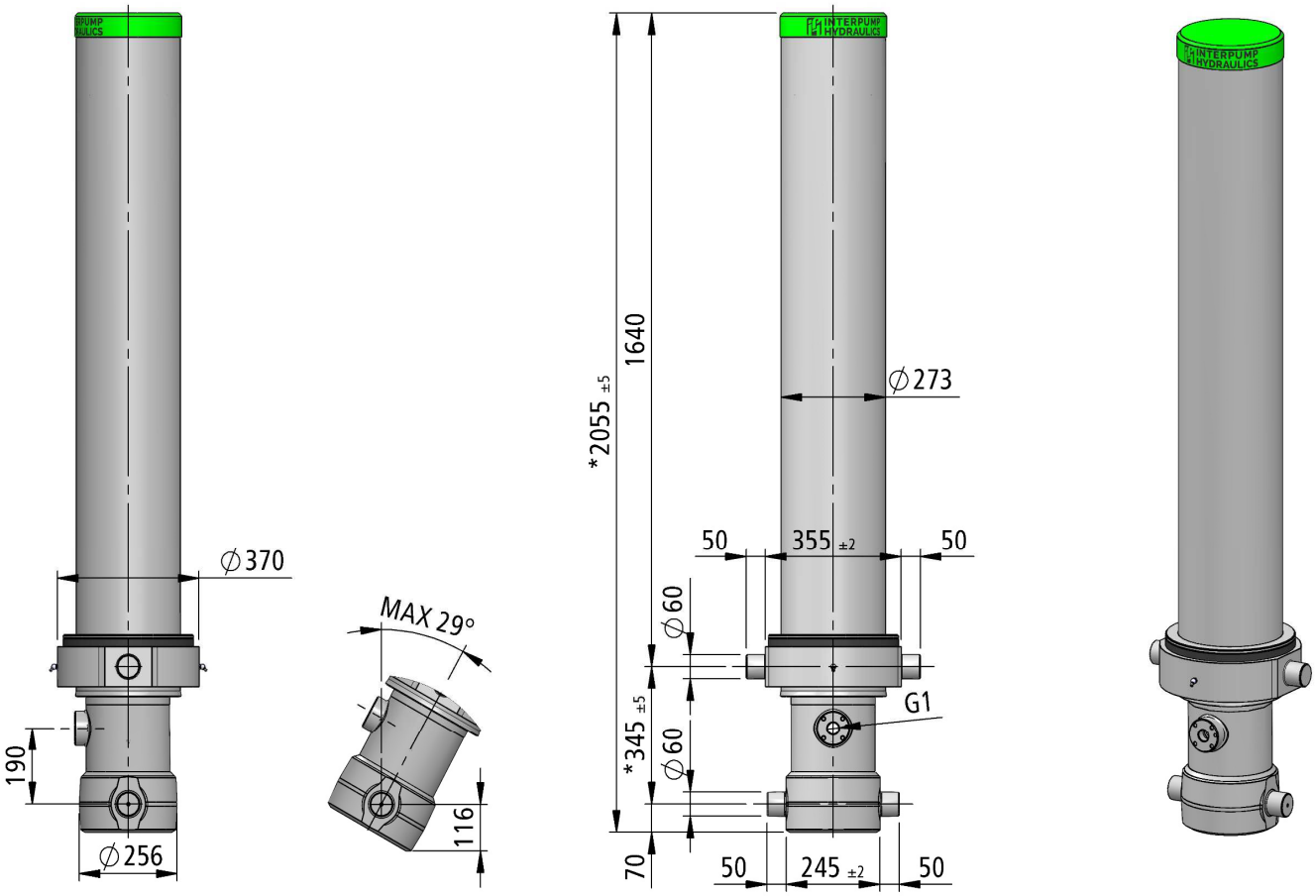

5C1885196501AN - 5C-08020-196-5-M0345-0000N											Tipping weight 56-98 ton (**)
Extension	1	2	3	4	5	6	7	8	9	10	**Maximum pressure 250 bar**
Rod diameter [mm]	196	174	154	135	116						No. 5 telescopic extensions
Stroke length [mm]	1597	1603	1604	1608	1608						Total stroke length: 8020 mm
Oil [dm³]	48.2	38.1	29.8	23.0	17.0						Working volume 156,1 dm³ / Residual volume 11,2 dm³
Thrust [kN] at p max	664	523	410	315	233						Max cylinder load - Start tipping 345 kN
											Critical buckling load fully extended 351 kN (332 bar)

Technical notes		Guide kit: K15F001965001 - Seal kit: K25F001965001
* Mounting dimensions 345 including 20 (-5;+30) mm pull out	Max pump flow 220 L/min with end of stroke	Weight 488 kg
Seal ring: Temperature range (-40; +100) °C - Maximum linear speed 0.5 m/s	Max pump flow 190 L/min without end of stroke	Tipping time at flow max 43 s

Enamel RAL9005 two-component solvent semi-gloss finish minimum thickness 60 m l80 h spray salt test ISO 9227 rating 9 ISO 10289

Chrome coating type CRN on rod stage 40 h spray salt test ISO 9227 rating 9 ISO 10289

All the information here reported are intended for further investigations by users with technical knowledge. The user, as manufacturer of the completed machinery which will incorporate the here described components, is the solely responsible for the final selection of the components. The user must carry out necessary research and tests on components to determine whether, by its design and construction, all performance, endurance, maintenance, safety and warning requirements are met. The user must assure the compliance of the completed machinery with all appropriate laws, directives, norms, industry standards The cylinder has been designed to provide only a linear pushing force. The cylinder is not a structural member and must not be used as a stabilizer or be subject to side or pulling load. The cylinder will not prevent the dump body or trailer from rollover or lateral tilt. Cylinder rated pressure reflect only the capability of the pressure-containing envelope and not the force transmitting capability of mounting configurations. The ordinary use of telescopic cylinder will not require any coating since the telescopic stages are exposed to atmospheric agents only during the tip-up operation, if duration is below 2 hours. (**) Tipping weight calculation-The body weight plus the max payload are the max tipping weight that can be raised by the cylinder. This value, calculated at the max pressure, is a rough indication of the tipping power of the cylinder and must be used as a first criteria for the selection of the cylinder. The real tipping mass can only be calculated by the design engineer of the completed machinery, and must take into account the geometry of the dump body, the operating conditions and all the reasonably foreseeable uses.

Related documentation 20/01/2023

Read and understand Mounting instructions, User manual, Oil specifications, User responsibility before use